TRACKING TEST 3
REVISION

1. $$f(x) = 3x^3 - 2x^2 + kx + 9.$$

Given that when $f(x)$ is divided by $(x + 2)$ there is a remainder of -35,

(a) find the value of the constant k, **(2)**

(b) find the remainder when $f(x)$ is divided by $(3x - 2)$. **(3)**

2. *(a)* Given that $t = \log_3 x$, find expressions in terms of t for

(i) $\log_3 x^2$,

(ii) $\log_9 x$. **(4)**

(b) Hence, or otherwise, find to 3 significant figures the value of x such that

$$\log_3 x^2 - \log_9 x = 4.$$ **(3)**

3. Solve, for $0 \le x < 360$, the equation

$$3\cos^2 x° + \sin^2 x° + 5\sin x° = 0.$$ **(7)**

4. The circle C has centre $(-1, 6)$ and radius $2\sqrt{5}$.

(a) Find an equation for C. **(2)**

The line $y = 3x - 1$ intersects C at the points A and B.

(b) Find the x-coordinates of A and B. **(4)**

(c) Show that $AB = 2\sqrt{10}$. **(3)**

5.

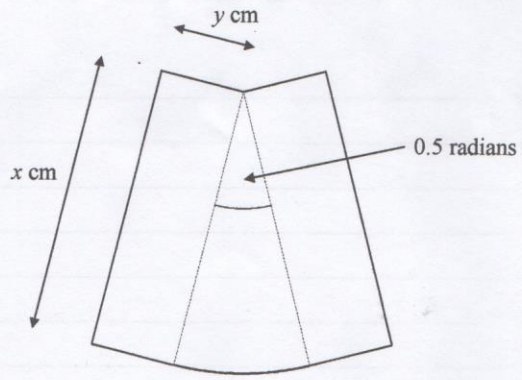

Figure 3

Figure 3 shows a design consisting of two rectangles measuring x cm by y cm joined to a circular sector of radius x cm and angle 0.5 radians.

Given that the area of the design is 50 cm^2,

(a) show that the perimeter, P cm, of the design is given by

$$P = 2x + \frac{100}{x}.$$ **(5)**

(b) Find the value of x for which P is a minimum. **(4)**

(c) Show that P is a minimum for this value of x. **(2)**

(d) Find the minimum value of P in the form $k\sqrt{2}$. **(2)**

6. *(a)* By completing the square, find in terms of the constant k the roots of the equation

$$x^2 + 4kx - k = 0.$$ **(4)**

(b) Hence find the set of values of k for which the equation has no real roots. **(4)**

7. A sledge of mass 4 kg rests in limiting equilibrium on a rough slope inclined at an angle 10° to the horizontal. By modelling the sledge as a particle,

(a) show that the coefficient of friction, μ, between the sledge and the ground is 0.176 correct to 3 significant figures.

(6 marks)

The sledge is placed on a steeper part of the slope which is inclined at an angle 30° to the horizontal. The value of μ remains unchanged.

(b) Find the minimum extra force required along the line of greatest slope to prevent the sledge from slipping down the hill.

(5 marks)

8. Anila is practising catching tennis balls. She uses a mobile computer-controlled machine which fires tennis balls vertically upwards from a height of 2.5 metres above the ground. Once it has fired a ball, the machine is programmed to move position rapidly to allow Anila time to get into a suitable position to catch the ball.

The machine fires a ball at 24 $m\,s^{-1}$ vertically upwards and Anila catches the ball just before it touches the ground.

(a) Draw a speed-time graph for the motion of the ball from the time it is fired by the machine to the instant before Anila catches it.

(3 marks)

(b) Find, to the nearest centimetre, the maximum height which the ball reaches above the ground.

(4 marks)

(c) Calculate the speed at which the ball is travelling when Anila catches it. **(4 marks)**

(d) Calculate the length of time that the ball is in the air. **(3 marks)**

9.

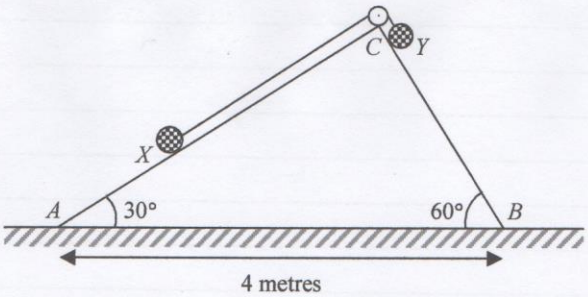

Fig. 3

Figure 3 shows a particle X of mass 3 kg on a smooth plane inclined at an angle 30° to the horizontal, and a particle Y of mass 2 kg on a smooth plane inclined at an angle 60° to the horizontal. The two particles are connected by a light, inextensible string of length 2.5 metres passing over a smooth pulley at C which is the highest point of the two planes.

Initially, Y is at a point just below C touching the pulley with the string taut. When the particles are released from rest they travel along the lines of greatest slope, AC in the case of X and BC in the case of Y, of their respective planes. A and B are the points where the planes meet the horizontal ground and $AB = 4$ metres.

(a) Show that the initial acceleration of the system is given by $\frac{g}{10}\left(2\sqrt{3}-3\right)\ m\,s^{-2}$.

(7 marks)

(b) By finding the tension in the string, or otherwise, find the magnitude of the force exerted on the pulley and the angle that this force makes with the vertical.

(7 marks)

(c) Find, correct to 2 decimal places, the speed with which Y hits the ground. **(4 marks)**

1.	*(a)*	$f(-2) = -35 \quad \therefore \; -24 - 8 - 2k + 9 = -35$ $k = 6$	M1 A1
	(b)	$= f(\frac{2}{3})$	B1
		$= 3(\frac{8}{27}) - 2(\frac{4}{9}) + 6(\frac{2}{3}) + 9 = \frac{8}{9} - \frac{8}{9} + 4 + 9 = 13$	M1 A1 **(5)**

2.	*(a)*	*(i)* $= 2\log_3 x = 2t$	M1 A1
		(ii) $= \frac{\log_3 x}{\log_3 9} = \frac{\log_3 x}{2} = \frac{1}{2}t$	M1 A1
	(b)	$2t - \frac{1}{2}t = 4$	
		$t = \frac{8}{3}$	M1
		$\log_3 x = \frac{8}{3}, \quad x = 3^{\frac{8}{3}} = 18.7$	M1 A1 **(7)**

3.	$3(1 - \sin^2 x) + \sin^2 x + 5\sin x = 0$	M1
	$2\sin^2 x - 5\sin x - 3 = 0$	A1
	$(2\sin x + 1)(\sin x - 3) = 0$	M1
	$\sin x = 3$ (no solutions) or $-\frac{1}{2}$	A1
	$x = 180 + 30, 360 - 30$	B1 M1
	$x = 210, 330$	A1 **(7)**

4.	*(a)*	$(x+1)^2 + (y-6)^2 = (2\sqrt{5})^2$	M1
		$(x+1)^2 + (y-6)^2 = 20$	A1
	(b)	sub. $y = 3x - 1$ into eqn of C:	
		$(x+1)^2 + [(3x-1) - 6]^2 = 20$	M1
		$(x+1)^2 + (3x-7)^2 = 20$	A1
		$x^2 - 4x + 3 = 0$	
		$(x-1)(x-3) = 0$	M1
		$x = 1, 3$	A1
	(c)	$x = 1 \Rightarrow y = 2 \quad \therefore (1, 2), \qquad x = 3 \Rightarrow y = 8 \quad \therefore (3, 8)$	B1
		$AB = \sqrt{(3-1)^2 + (8-2)^2} = \sqrt{4+36} = \sqrt{40} = \sqrt{4\times 10} = 2\sqrt{10}$	M1 A1 **(9)**

5.	*(a)*	area $= 2xy + (\frac{1}{2} \times x^2 \times 0.5) = 2xy + \frac{1}{4}x^2 = 50$	M1
		$\therefore \; y = \frac{50 - \frac{1}{4}x^2}{2x} = \frac{25}{x} - \frac{1}{8}x$	A1
		$P = 2x + 4y + (x \times 0.5) = \frac{5}{2}x + 4y$	M1
		$= \frac{5}{2}x + 4(\frac{25}{x} - \frac{1}{8}x)$	M1
		$= \frac{5}{2}x + \frac{100}{x} - \frac{1}{2}x = 2x + \frac{100}{x}$	A1
	(b)	$\frac{dP}{dx} = 2 - 100x^{-2}$	M1 A1
		for minimum, $\quad 2 - 100x^{-2} = 0$	M1
		$x^2 = 50$	
		$x = \sqrt{50}$ or $5\sqrt{2}$	A1
	(c)	$\frac{d^2P}{dx^2} = 200x^{-3}$	M1
		when $x = 5\sqrt{2}$, $\frac{d^2P}{dx^2} = \frac{2}{5}\sqrt{2}$, $\frac{d^2P}{dx^2} > 0 \; \therefore$ minimum.	A1
	(d)	$= 2(5\sqrt{2}) + \frac{100}{5\sqrt{2}} = 10\sqrt{2} + 10\sqrt{2} = 20\sqrt{2}$	M1 A1 **(13)**

6. *(a)* $(x+2k)^2-(2k)^2-k=0$ — M1

$(x+2k)^2=4k^2+k$ — A1

$x+2k=\pm\sqrt{4k^2+k}$ — M1

$x=-2k\pm\sqrt{4k^2+k}$ — A1

(b) no real roots if $4k^2+k<0$ — M1

$k(4k+1)<0$, critical values: $-\frac{1}{4}$, 0 — A1

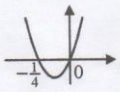

M1

$\therefore\ -\frac{1}{4}<k<0$ — A1 **(8)**

7. *(a)*

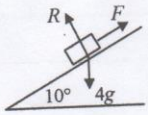

resolve perp. to plane: $R-4g\cos 10=0 \Rightarrow R=4g\cos 10$ — M1 A1

resolve // to plane: $F-4g\sin 10=0 \Rightarrow F=4g\sin 10$ — M1 A1

$\mu=\frac{F}{R}=\tan 10=0.176$ (3sf) — M1 A1

(b) let extra force be P

resolve perp. to plane: $R-4g\cos 30=0 \Rightarrow R=4g\cos 30$ — M1

$F=\mu R=5.986$ — A1

resolve // to plane: $F+P-4g\sin 30=0$ — M1 A1

$P=2g-F=13.6$ N — A1 **(11)**

8. *(a)*

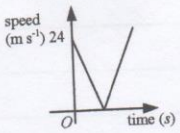

B3

(b) at max. height, $v=0$; use $v^2=u^2+2as$ with $a={}^-9.8$, $u=24$ — M1

$0=576-19.6s \quad \therefore s=29.387\ldots$ — M1 A1

start value 2.5 m, so max. height = 31.89 m. (nearest cm) — A1

(c) use $v^2=u^2+2as$ with $a={}^-9.8$, $u=24$ and $s={}^-2.5$ (up is +ve) — M1

$v^2=576+49=625$ — M1 A1

so $v=\pm 25$ i.e. speed = 25 m s^{-1} downwards — A1

(d) use $v=u+at$ with $v=25$, $u={}^-24$ $a=9.8$ (down is +ve) — M1

$25={}^-24+9.8t \quad \therefore t=5$ — M1 A1 **(14)**

9. *(a)* for X: $T-3g\sin 30°=3a \quad \therefore T-\frac{3}{2}g=3a$ (1) — M1 A1

for Y: $2g\cos 30°-T=2a \quad \therefore g\sqrt{3}-T=2a$ (2) — M1 A1

(1) + (2) gives $g\sqrt{3}-\frac{3}{2}g=5a$ — M1 A1

$a=\frac{g\sqrt{3}}{5}-\frac{3g}{10} \quad \therefore a=\frac{g}{10}(2\sqrt{3}-3)$ — A1

(b) sub. a into (1) to get $T=3a+\frac{3g}{2}=\frac{3g}{10}(2\sqrt{3}-3)+\frac{3g}{2}$ — M1 A1

$T=16.0645$ — A1

force on pulley $=\sqrt{(T^2+T^2)}=T\sqrt{2}$ — M1

force on pulley = 22.7 N — A1

force acts at an angle 45° to each plane i.e. 15° to vertical — M1 A1

(c) initially, Y is at C and $CB=4\sin 30°=2$ m — M1

use $v^2=u^2+2as$ with $u=0$, $s=2$, $a=\frac{g}{10}(2\sqrt{3}-3)$ — M1

$v^2=0+\frac{4g}{10}(2\sqrt{3}-3)$ so $v=1.35$ m s^{-1} (2dp) — M1 A1 **(18)**